36 Frame BLDC Gear Motor

General Information

- With inner integrated drive
- Low noise
- Applied to cash counting machine and office automatic equipment
- Customization at volume is optional

Specification

ME036RS100-SI0010			Wires Connection Chart		
	Unit	Value	Pin	Color	Function
Voltage	VDC	12	1	RED	Power +12V
No-load Current	mA	180	2	BLK	GND
No-load Speed	RPM	300	3	YEL	CW/CCW
Rated Torque	Ncm	25	4	GRN	PWM 10-30KHZ
Rated Speed	RPM	240	5	BLU	Speed Output
Rated Current	mA	1000	6	WHT	ST/SP
Rotation Direction		CW/CCW			
Gearbox Ratio		10:1			
Weight	g	320			

Mechanical

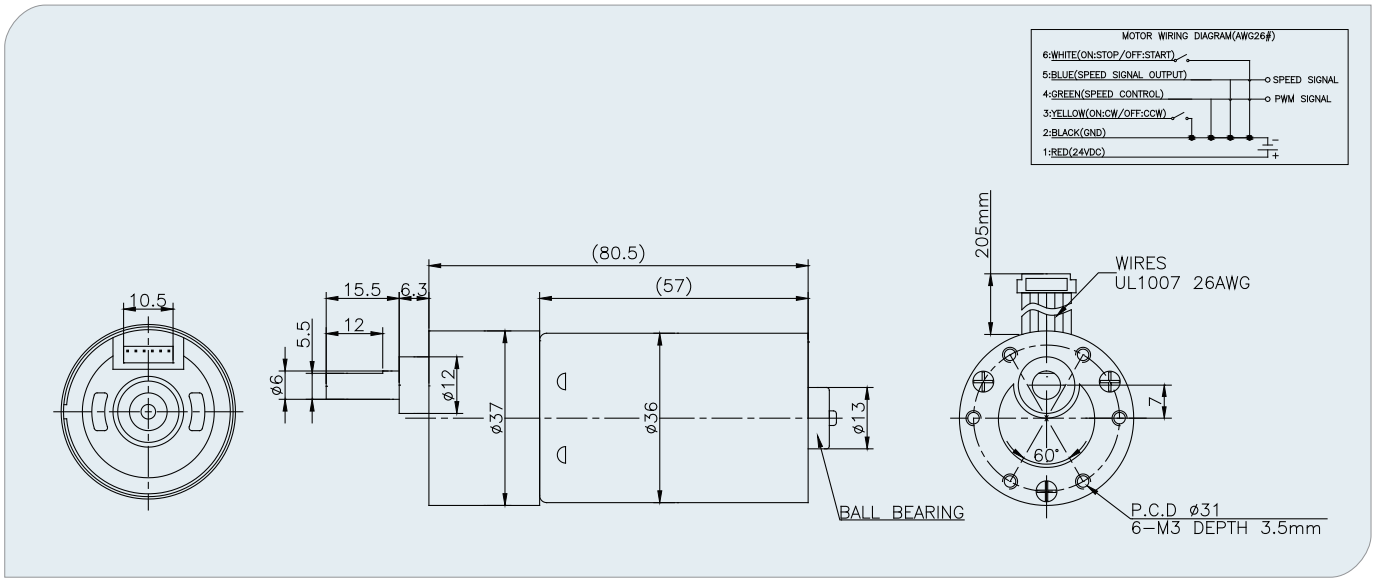

Tel:+86 510 83079076 Fax:+86 510 83079077 Email:sales@exmek.com