MP086YG
Stepper Motor

- 86mm, 1.8Degree Enhanced Hybrid Stepper Motor

Mechanical

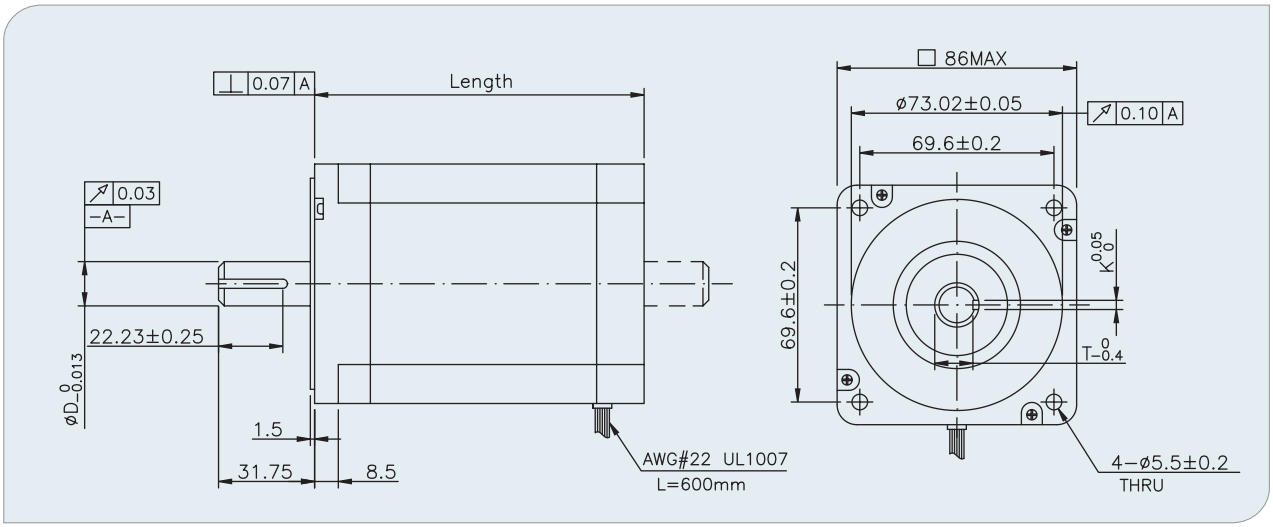

Specifications

Part No.	Connection	Phase Current (A)	Phase Resistance (OHMS)	Phase Inductance (mH)	Holding Torque (Nm)	Detent Torque (Nm)	No.of Wires	Rotor Inertia (kg.cm²)	Length (mm)	Weight (Kg)	D (mm)	K (mm)	T (mm)
MP086YG100	Parallel	6.1	0.25	2.1	2.8	0.2	8	0.66	67	1.6	12.7	3.175	10.92
	Series	3	1	8.4	2.8	0.2	8	0.66	67	1.6	12.7	3.175	10.92
	Unipolar	4.3	0.5	2.1	2.3	0.2	8	0.66	67	1.6	12.7	3.175	10.92
MP086YG200	Parallel	8.6	0.18	1.4	4.59	0.23	8	1.4	79.5	2.27	12.7	3.175	10.92
	Series	4.3	0.72	5.8	4.59	0.23	8	1.4	79.5	2.27	12.7	3.175	10.92
	Unipolar	6.1	0.36	1.4	3.25	0.23	8	1.4	79.5	2.27	12.7	3.175	10.92
MP086YG300	Parallel	10	0.18	1.8	8.58	0.25	8	2.7	118	3.81	12.7	3.175	10.92
	Series	5	0.7	7	8.58	0.25	8	2.7	118	3.81	12.7	3.175	10.92
	Unipolar	7.1	0.35	1.8	6.07	0.25	8	2.7	118	3.81	12.7	3.175	10.92
MP086YG400	Parallel	9.9	0.22	2.3	12.1	0.38	8	4	156.5	5.39	15.87	4.763	13.13
	Series	5	0.87	9	12.1	0.38	8	4	156.5	5.39	15.87	4.763	13.13
	Unipolar	7	0.44	2.3	8.58	0.38	8	4	156.5	5.39	15.87	4.763	13.13

Tel:0086 510 83079076 Fax:0086 510 83079077 Email:sales@exmek.com