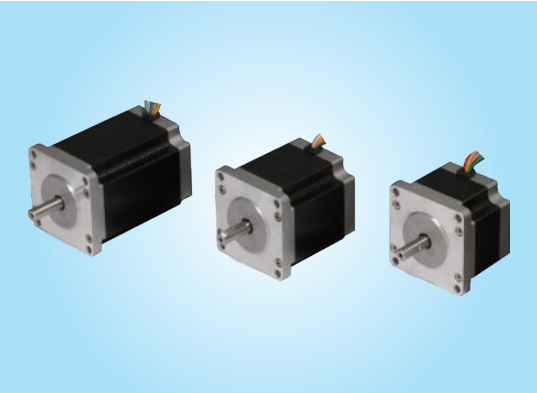

MP060NB
Stepper Motor

- 60mm, 1.8Degree Enhanced Hybrid Stepper Motor

Mechanical

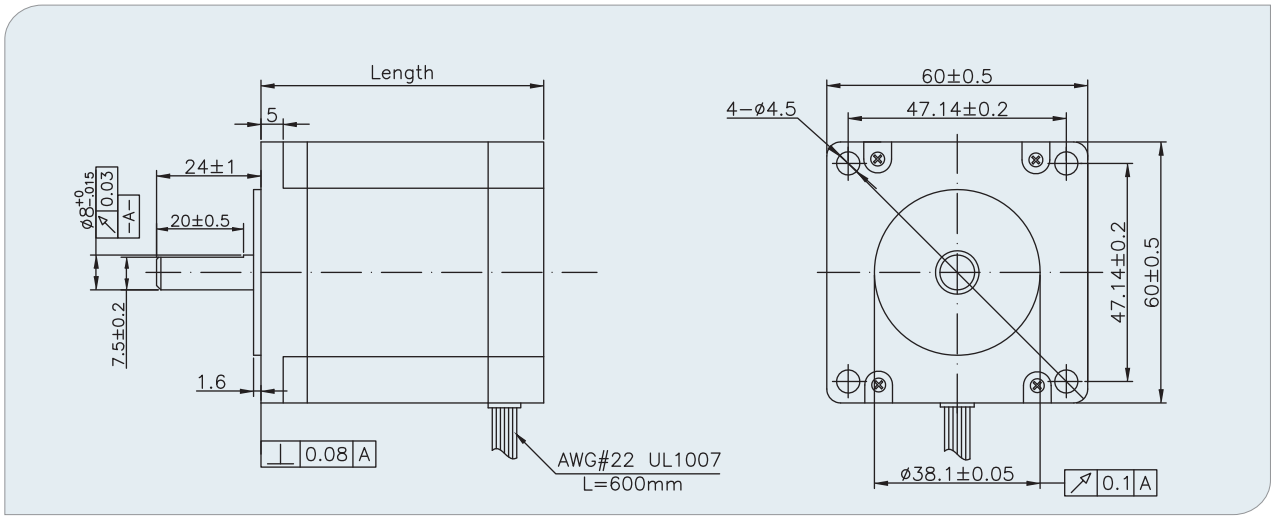

Specifications

Part No.	Connection	Phase Current (A)	Phase Resistance (OHMS)	Phase Inductance (mH)	Holding Torque (Ncm)	Detent Torque (Ncm)	No.of Wires	Rotor Inertia (g.cm²)	Length (mm)	Weight (Kg)
MP060NB100	Parallel	2.8	0.75	2	110	6	8	275	45	0.6
	Series	1.4	3	8	110	6	8	275	45	0.6
	Unipolar	2	1.5	2	78	6	8	275	45	0.6
MP060NB200	Parallel	2.8	0.9	3.6	165	9	8	300	56	0.77
	Series	1.4	3.6	14.4	165	9	8	300	56	0.77
	Unipolar	2	1.8	3.6	117	9	8	300	56	0.77
MP060NB300	Parallel	2.8	1.2	4.6	210	12	8	570	65	1
	Series	1.4	4.8	18.4	210	12	8	570	65	1
	Unipolar	2	2.4	4.6	150	12	8	570	65	1
MP060NB400	Parallel	2.8	1.2	5.6	270	15	8	579	77	1.2
	Series	1.4	4.8	22.4	270	15	8	579	77	1.2
	Unipolar	2	2.4	5.6	190	15	8	579	77	1.2
MP060NB500	Parallel	2.8	1.5	6.8	310	17	8	840	86	1.4
	Series	1.4	6	27.2	310	17	8	840	86	1.4
	Unipolar	2	3	6.8	220	17	8	840	86	1.4

Tel:0086 510 83079076 Fax:0086 510 83079077 Email:sales@exmek.com