MPC023/034
Brake

General information

- Insulation Class B
- Electrophoresis Plating Treatment
- NEMA 23/34 Mounting Configuration
- Special application on request

Mechanical

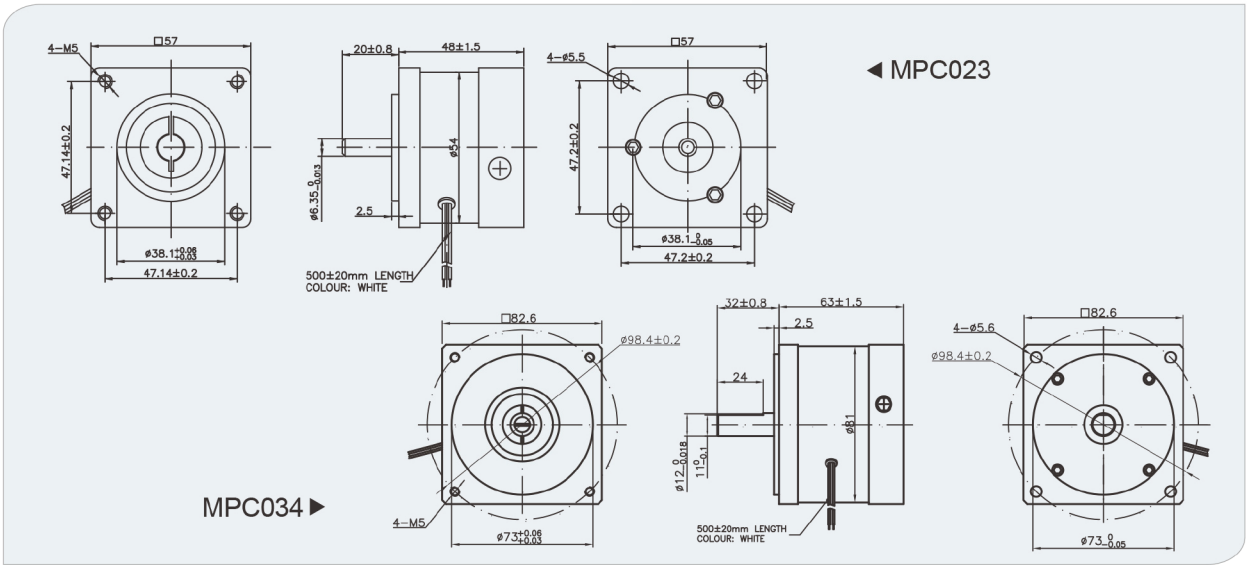

Specifications

Model	Voltage	Resistance	Current	Static Torque	Power	Start Voltage	Weight	Length
	(VDC)	(OHMS)	(A)	(Nm)	(W)	(VDC)	(g)	(mm)
MPC023-	24	92	0.26	0.5	6.2	15	400	48
MPC034-	24	58	0.41	1.68	9.8	15	500	63

Implication For Name

MPC 0X - X X X

DIGIT	MEDEL
1	023
2	034

DIGIT	VOLTS
1	12VDC
2	24VDC

DIGIT	MOUNTING SHAFT DIA.
1	Φ6mm
2	Φ9mm
3	Φ12mm
4	OR DESIGNED FOR CUS.

SPECIAL APPLICATION

Tel:0086 510 83079076 Fax:0086 510 83079077 Email:sales@exmek.com